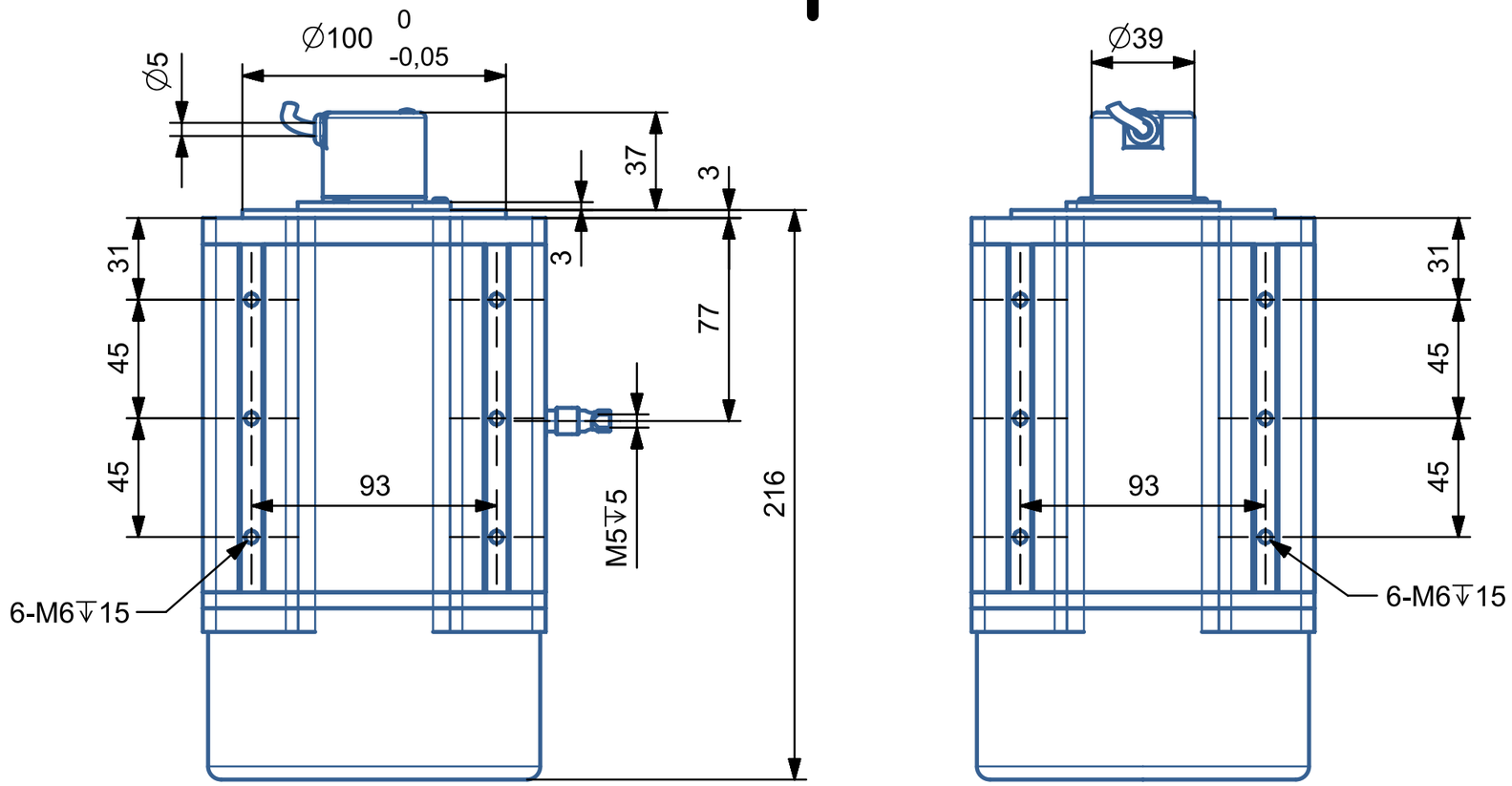

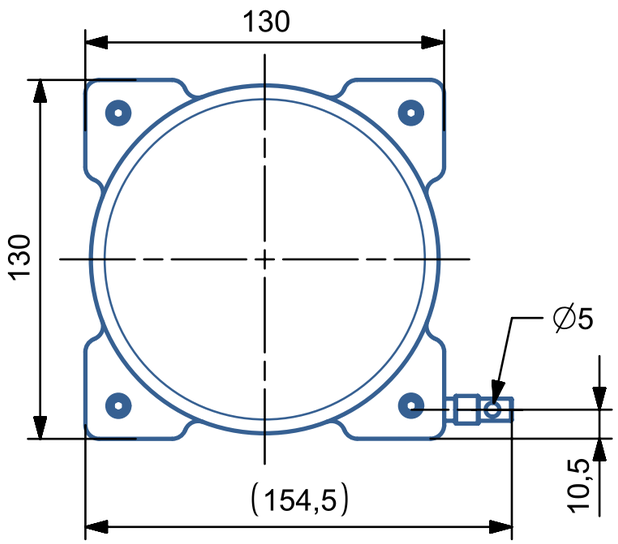

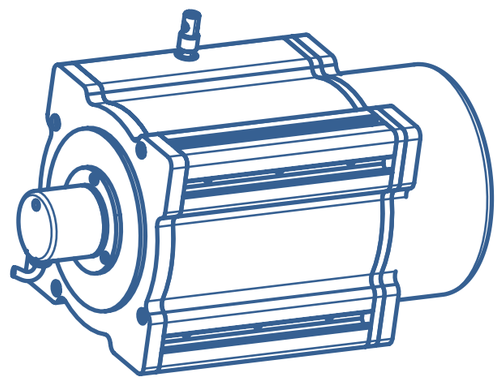

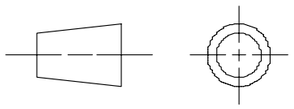

ALL DIMENSIONS IN MM

BRITER ENCODER

THIS DRAWING HAS BEEN PRODUCED USING AN EXAMPLE TEMPLATE PROVIDED BY SIEMENS PLM SOFTWARE

FIRST ISSUED	
DRAWN BY	
CHECKED BY	
APPROVED BY	

TITLE

IP54 BRT38 20m Briterencoder

SIZE	DRG NO.	SHEET REV
A3	20M□□IP54_□□□□□	A

SCALE 1:1 | SHEET 2 OF 3

A3